Manual

Shanghai Sunny Hengping

Balance Series

- **FA Electronic Balance（Electronic Analytical Balance）**
- **FB Electronic Balance（Auto Internal Calibration Electronic Analytical Balance）**
- **JA Electronic Balance（Electronic Precision Balance）**

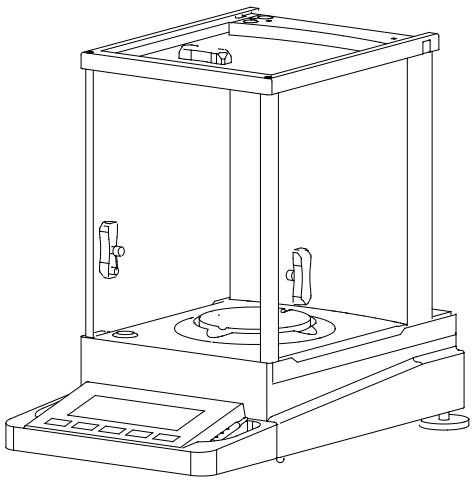

FA/FB/JA Series

Quick Use Guide

Hold on to click the button , until appear required hints

Power On

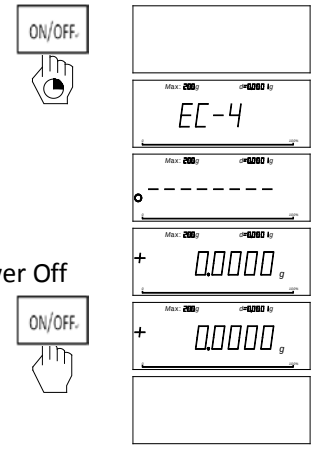

Power Off

Basic Weighing

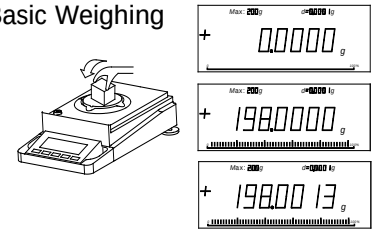

Calibration

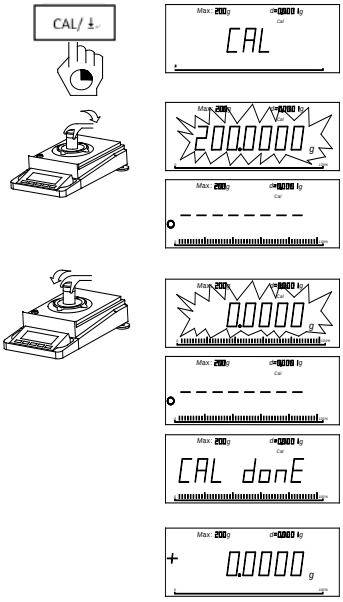

Tare

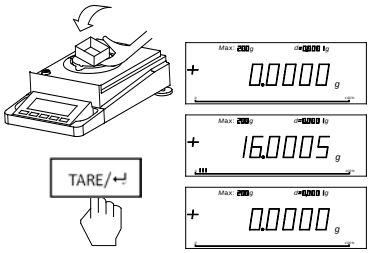

Zero

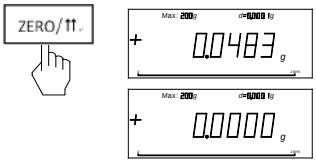

Piece

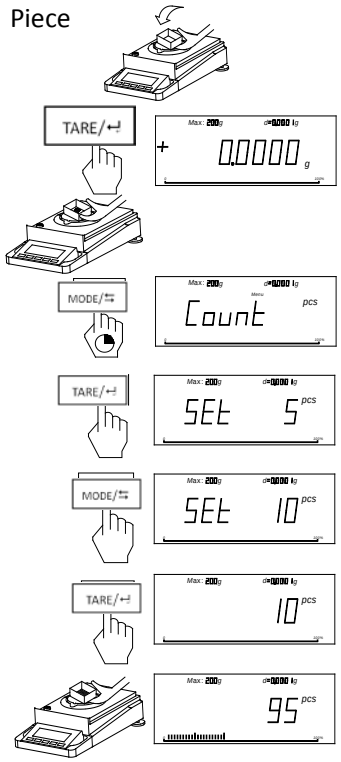

Percentage

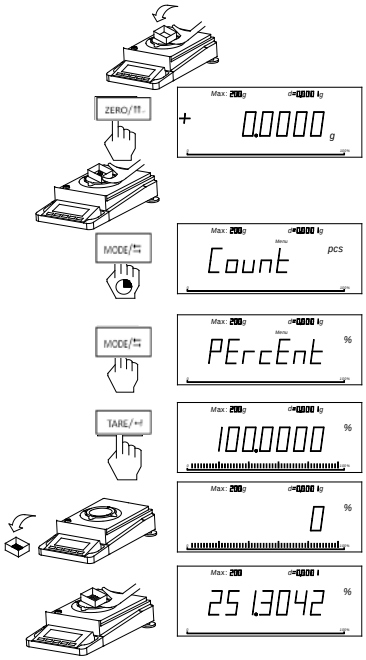

Units Conversion

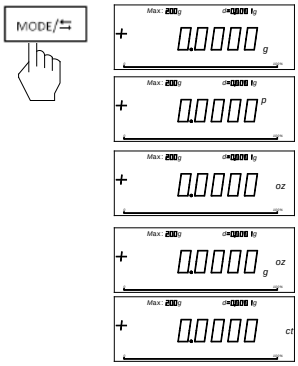

Function Mode Conversion

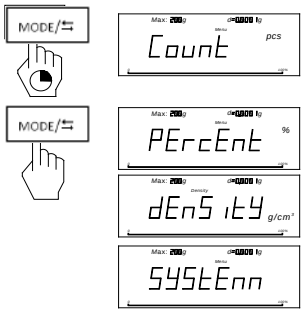

CONTENTS

1 BALANCE SERIES INTRODUCTION.....5

1.1 INTRODUCTION 5

1.2 BALANCE STRUCTURE..... 6

1.3 OPERAING KEY FUNCTION INDEX 7

2 USAGE 8

2.1 PACKAGE LIST..... 8

2.2 INSTALL, LEVEL ADJUSTMENT..... 9

2.3 SAFETY GUIDELINES/POWER 9

2.4 CALIBRATION..... 10

3 WEIGHING 11

3.1 POWER ON/OFF..... 11

3.2 BASIC WEIGHING..... 11

3.3 TARE..... 11

3.4 ZERO..... 12

4 MENU 13

4.1 OVERVIEW..... 13

4.2 FUNCTION MENU OPERATION..... 14

4.3 BASIC WEIGHING OPERATION 15

1、 Basic Weighing 15

2、Weighing with Container 15

3、Unit Conversion..... 15

4.4 FUNCTION WEIGHING OPERATION 16

1、 Piece Count..... 16

2、Weighing in Percent..... 17

4.5 SYSTEM..... 18

4.6 DATE COMMUNICATION 18

5 CONFIGURING BALANCE 19

5.1 OPERATING THE CONFIGURING KEYS 19

5.2 BALANCE FUNCTION SETTING LIST（* MEASN FACTORY SET） 20

5.3 BALANCE SETTING FUNCATION EXPLAIN 21
5.4 BALANCE SETTING FOR QUICK WEIGHING 21
5.5 BALANCE SETTING FOR STRONG AIR ENVIROMENT 21
5.6 BALANCE SETTING FOR LINEAR CORRECTION 21
5.7 RECOVER FACTORY SETTING 21

6 TECHNICAL PARAMETERS, FUNCTION OPTIONSL, PARTS OPTIONAL, DIMENSION 22

6.1 TECHNICAL PARAMETERS 22
6.2 RS232 PORT 25
6.3 FIGURE DIMENSION 26

7 APPENDIX 27

7.1 RS232 PORT DATE COMMUNICATION 27
7.2 FAILURE INFORMATION AND SOLUTIONS 28
7.3 MAINTENANCE AND CLEANING 30

1 BALANCE SERIES INTRODUCTION

1.1 Introduction

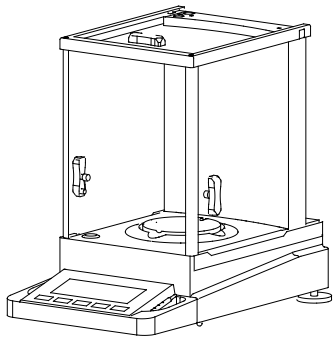

Same appearance, similar to the opertaion, not the same sensor module. It contains four series products:

1. FA series electronic analytic balance

Readability: 0.1mg

2. FB series internal calibraion balance

Readability: 0.1/1mg

3. JA serires electronic precision balance

Readability: 1mg

The basic function of four series balance is almost same, expect special funcion (such as denstiy measurement).

Detail as follow:

Series No	FA	FB		JA
Weighing capacity （g）	100- 220	120-220	220-420	100-500
Actual scale interval （g）	0.0001	0.0001	0.001	0.001
Accuracy class	Ⅰ	Ⅰ	Ⅱ	Ⅱ
Calibration method	External	Internal		External
Density device	None	None		None
contour dimension （mm）	365×223×338（length×width×height）			
Package dimension（mm）	498×313×453（length×width×height）			
Pan size（mm）	ø 90			
Effective height above pan（mm）	210			
Net weight kg（Gorss weight）	4.5(7.5)	4(7)		4.5(7.5)

1.2 Balance Structure

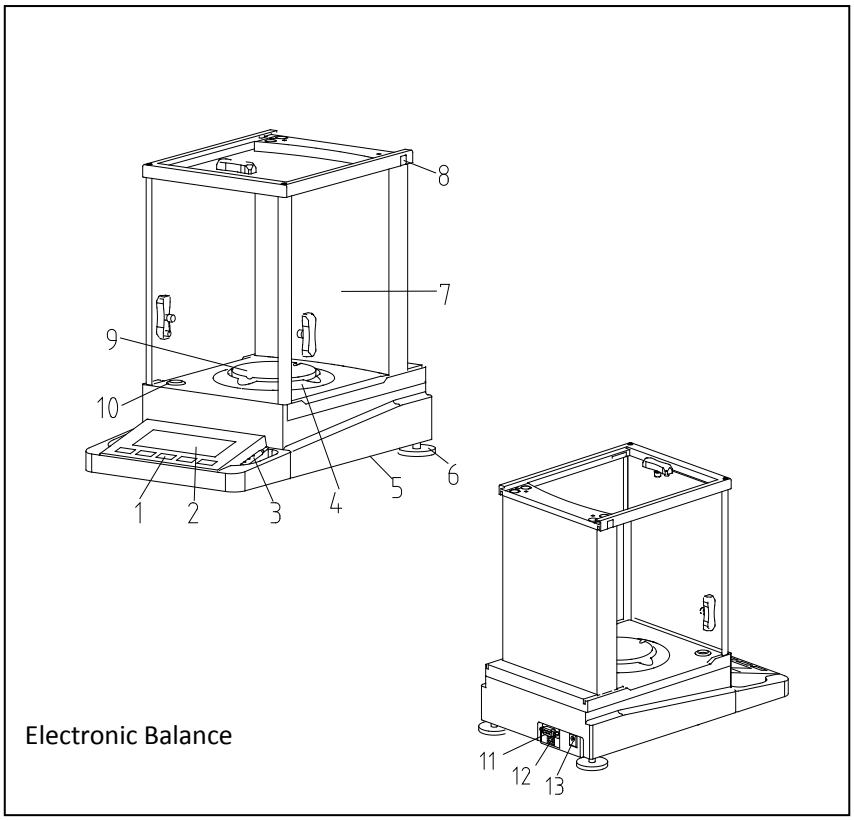

Electronic Balance

1）Operating Key

2）Display Screen

3）Unlocked pen for glass doors

4）Windbreak

5）Handing ring for hook

（In the bottom of balance）

6）Leveling foot

7）Windproof cover

8）Lock for glass

9）Weighting pan

10）Level indicator

11）RS232 port

12）USB port（optional）

13）Power adapter socket

1.3 Operaing Key Function Index

The balance have two operating methods： **weighing mode and function mode**. According to the choice of operating mode and the length of pressing key. It has different meaning.

Weighing Mode

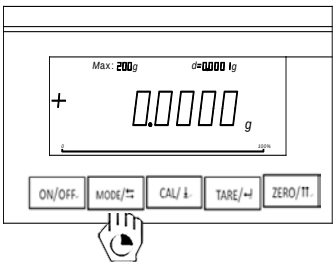

Function Mode

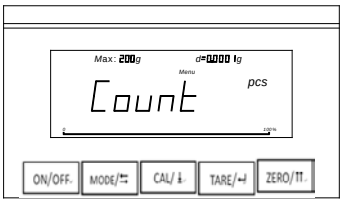

Operating key in weighing mode			
Press key for short time		**Press key for long time**	
ON/OFF	•ON（Shutdown State）	ON/OFF	•OFF（Start State）
MODE/⇆	•Unit convert	MODE/⇆	•Into function mode
CAL/ ↓	•Print	CAL / ↓	•Calibration
TARE/↵	•Weighting tare	TARE /↵	
ZERO/⇈	• Zero, cancel	ZERO/⇈	

Operating key in function mode			
Press key for short time		**Press key for long time**	
ON/OFF		ON/OFF	• OFF（Start State）
MODE/⇆	•Switch	MODE/⇆	●Return to function menu
CAL/ ↓	•Print	CAL/ ↓	
TARE/↵	•Enter, choice	TARE/↵	
ZERO/⇈	• Return to previous menu	ZERO/⇈	●Return to basic weighing mode

2 USAGE

2.1 Package List

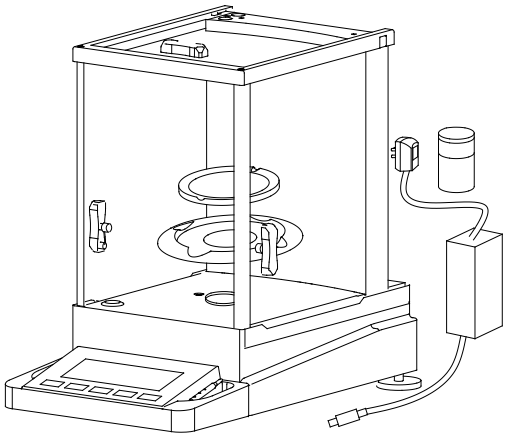

FA、FB、JA Electronic Balance

FA、FB、JA Balance Standard Configuration:

♦ Balance 1 pc

♦ AC Power 1 pc

♦ Pan 1 pc

♦ Windbreak 1 pc

♦ Calibration weight 1 pc（Except internal calibration balance）

♦ Manual 1 pc

♦ Certificate of quality 1 pc

♦ Guarantee card 1 pc

♦ Unlocked pen for glass doors 1pc

♦ Panel shelter 1 pc

Explanation:

- Open the package, take out the balance and accessories. Then check the balance if there is damage, accessories are complete. Check all the windproof door is in perfect condition and operation normally. If there is any fault, please connect to the agency of Shanghai Sunny Hengping.
- Different model balance has different calibraion weight, please see parameter list at part six.
- Please keep packing materials properly for transport

2.2 Install, level Adjustment

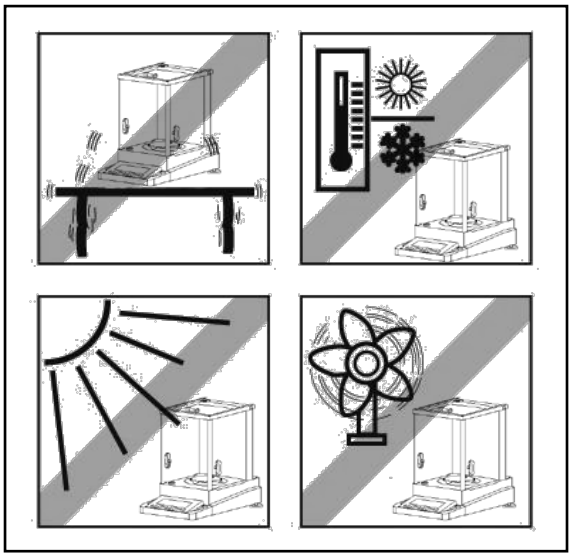

Best placed place

For high resolution analytical and precise balance, the right placed place is the key for accurately weighing. So please ensure that:

- Stable and no vilration position, as far as possible be level
- Avoid direct sunlight
- Avoid strenuous temperature variations
- Avoid air convection

Best placed place: the corner of shelter, stable table, as far as possible from the door, window, radiator and the outlet of air condition

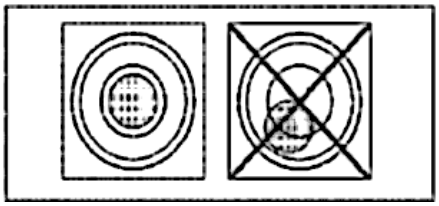

Through regulating the leveling foot, make the level bubble moving to the center of circle. Please adjust balance in the stable table, avoid the position of the large air flow, virbration and high rate temperature change. (as shown)

Notice: Please adjust level, when the balance move to a new place.

2.3 Safety Guidelines/Power

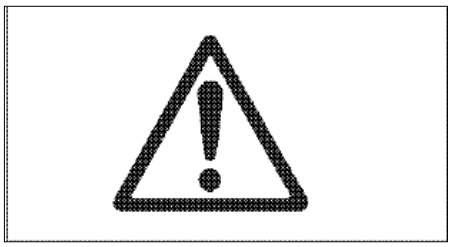

- Do not use the balance equipped with standard AC power in the damage area.
- Please confirm the power adapter whether is match to your local volatge before getting through the power.
- The balance can only be used in dry enviroment.

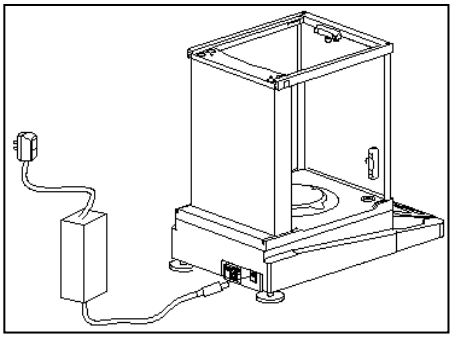

Power connection:

→Plug jack-plug of AC adapter in the socket of balance, another side connect the power.

→Turn on the power, a buzzer emits beep. The balance could be used.

Notice: The balance should be warmed-up for 60 minutes in first time, to achieve the working temperature, in order to obtain the accurate resultes.

2.4 Calibration

In order to obtain the accurate resultes, it is need to calibration according to the local acceleration of gravity.

Necessary situations to calibrate the balance:

- Before the first measurement
- After weighing for a period
- Weighing location changed

Should start the balance for 60 minutes before calibration to achieve the working temperature, in order to obtain the accurate.

External Calibrtaion

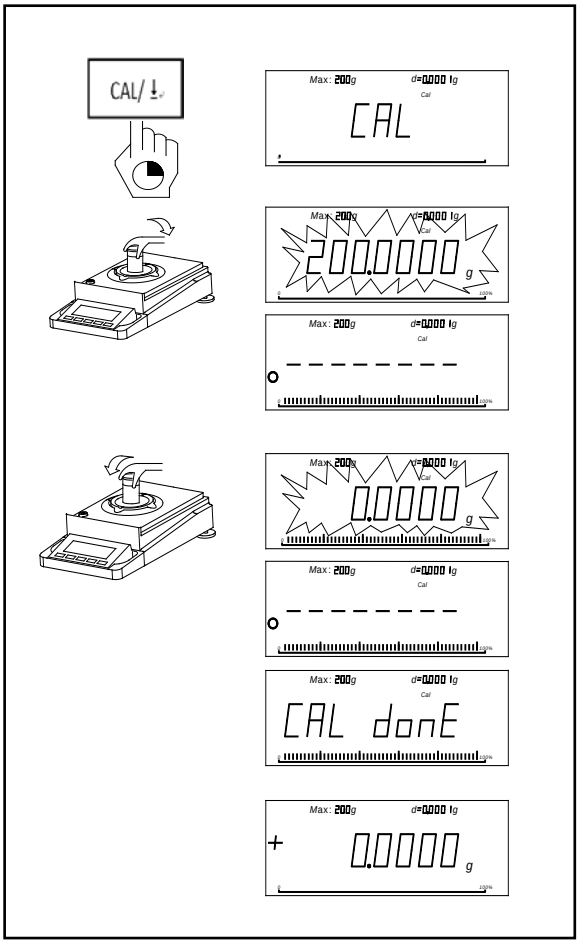

Clear weighting pan, perpare calibration weights.

Press CAL/ ⭳ , untill display " CAL ".

The needed calibraion weight value will flicker on the display screen.

Put the right calibration weight on the scale pan. When it shows" 0.0000 g ", remove weight.

When it displays " CAL donE " and emits prompting voice, the calibration is over. The balance return to the working situtaion. When shows " 0.0000 g ", the balance is ready.

Hint:

Press Zero/⇑ short time, could interrupt calibration any time.

3 WEIGHING

3.1 Power On/Off

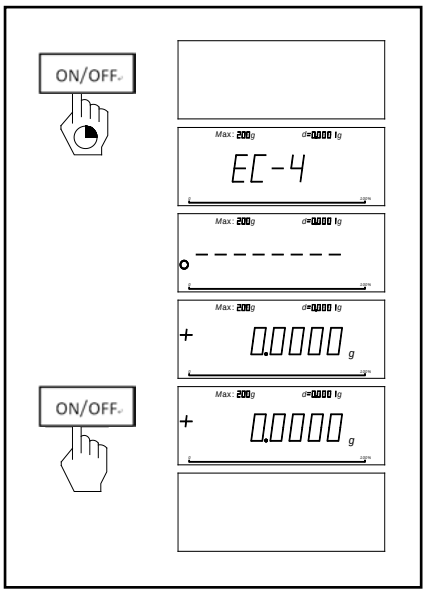

Power On

→Press ON/OFF

A self-test will be performed, and then return to zero, now it can be used.

Power Off

→Press ON/OFF for a while， then display screen power off.

3.2 Basic Weighing

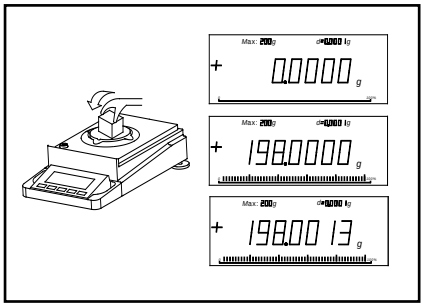

→Put the sample on the weighing pan.

→Wait untill it is stable.

→Read the data

3.3 Tare

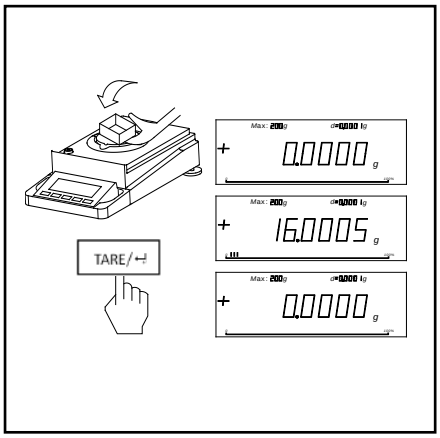

→Put vacant container on the weighing pan.

→It shows weight of container.

→Press Tare/↵

→Put the sample on the container, it reads data of weight of sample.

If remove the container from balance, the data will be negative. The data will keep untill power off or press Tare/↵.

Notice: This function can not be used under zero or above the maximum weighing.

3.4 Zero

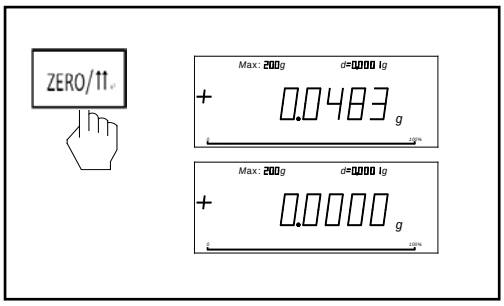

Press ZERO/↑↑ balance return to zero.

4 MENU

4.1 Overview

In the menu, you can change the weighing unit or choose other functions for different settings. It can be found in the 4.2.

Function menu

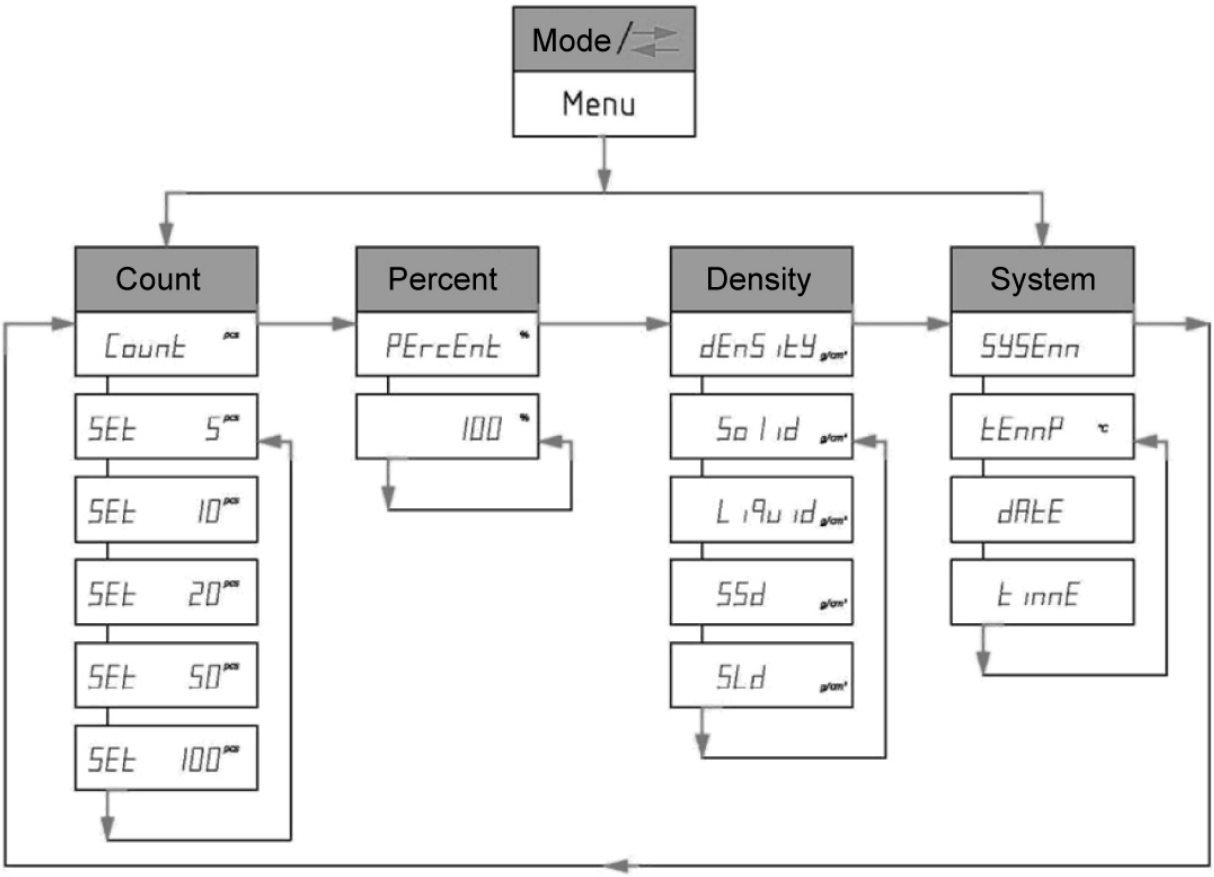

Into the function menu: Press MODE/⇆

Menu Navigation: Press MODE/⇆ to switch menu items.

Exit menu: Press ZERO/⇑ for long time to return weighing mode, or press ZERO/⇑ for short time to return to last menu.

4.2 Function Menu Operation

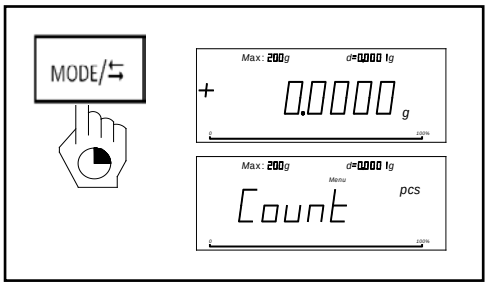

Enter the function mode.

In the mode of basic weighing, press MODE/⇆ for long time untill screen displys " Count ". It now in the piece mode.

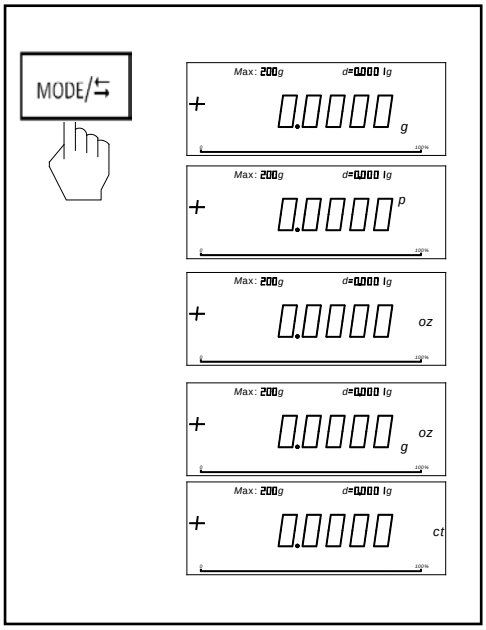

Function menu switch

Press MODE/⇆ for short time to switch different items

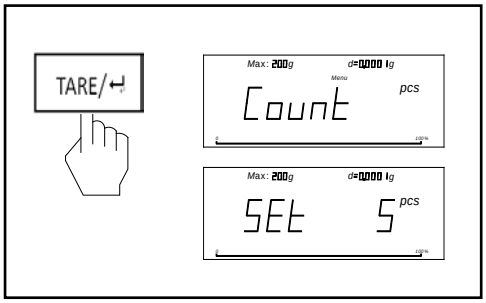

Function menu enter

Press TARE/↵ for short time to into the next menu

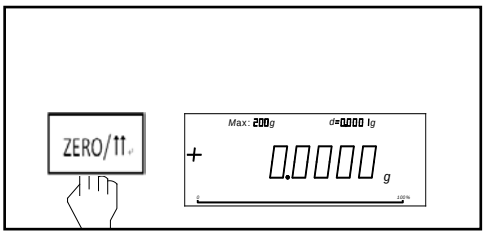

Return

Press ZERO/↑↑ for short time to return last menu.

4.3 Basic Weighing Operation

1、 Basic Weighing

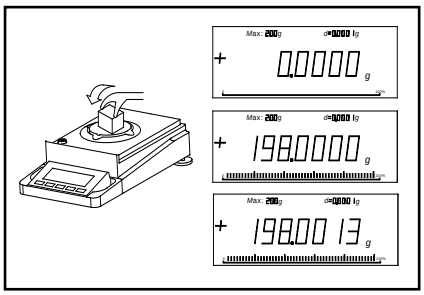

Press ZERO/⇑ , to make the balance return to zero, the balance shows" 0.0000 g ", put the sample on the weighing pan. When it is stable , read the data.

2、Weighing with Container

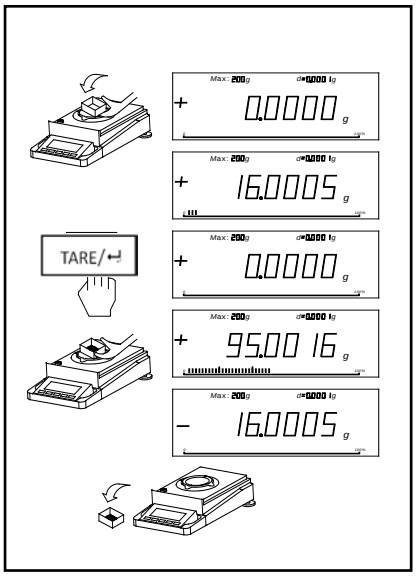

If it is necessary to weight the object (such as liguid) with a container (the weight of container will not be including), please follow the streps:

- Put the vacant container on the scale pan firstly.
- Press TARE/↵, then it shows" 0.0000 g ".
- Then put the object for weighing into the container. Please read the data after the balance is stable.

3、Unit Conversion

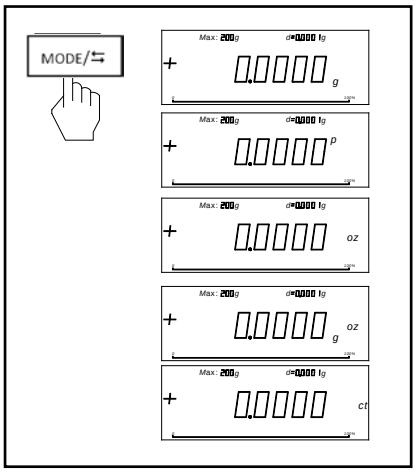

There are seveal units in the balance, including gram, pound, gold ounces, ounces and carat. Press MODE/⇆ to shift the units.

Their relationship as follows

Pound	1P=453.59237g	Gold Ounces	1oz.g=31.1034768g
Ounces	1oz=28.349523125 g	Carat	1ct=0.2g

4.4 Function Weighing Operation

Press MODE/⇆ to switch piece count, percentage and systme.

1、 Piece Count

The reference coefficient could be choosed from 5pcs, 10pcs, 20pcs, 50pcs and 100pcs. The bigger the coefficient is, the higher precision the result is.

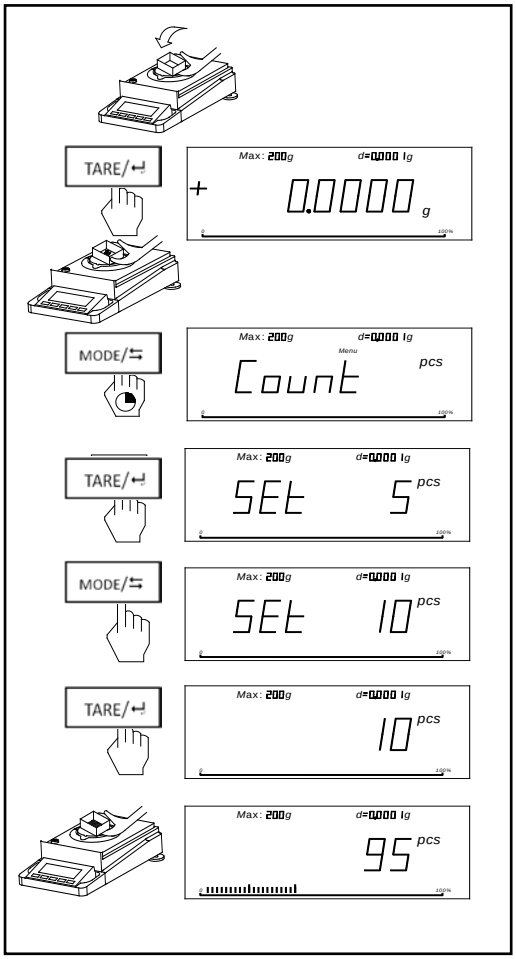

Steps（Such as 10pcs)：

- Put container on the balance. (Quit this step if no container is needed.)
- Press TARE/↵ , then balance shows" 0.0000 g ";
- Place 10 sample on the weighing pan.
- Press MODE/⇆ for long time， then balance shows "Count pcs "
- Press TARE/↵ enter into piece count mode.
- Press MODE/⇆ to choose reference cofficient.
- Press TARE/↵ to switch to "10 pcs "
- Put the same quantity of sample
- Press TARE/↵ for longtime to exit.

Notice：The minimum weight =10d（d：minimum scale）, Minimum weight of one piece not less than 1d. The sample could not be more than maximum weight.

Switching between piece and weight reading

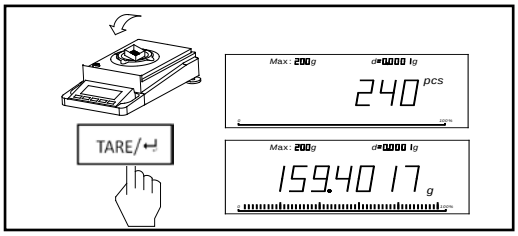

- Add sample on the container, shows piece count
- Press TARE/↵ , shows weight.
- Press TARE/↵ again， return to showing piece.

2、Weighing in Percent

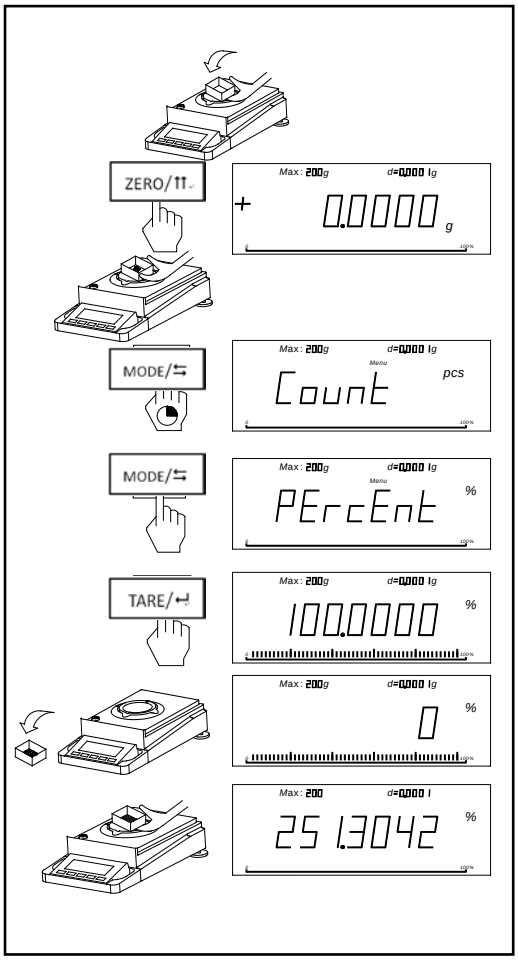

Steps：

• Put container on the balance. (Quit this step if no container is needed.)

- Press ZERO/⇑, then balance shows" 0.0000 g ".
- Place sample on the weighing pan.
- Press MODE/⇆ untill balance show "Count pcs ".
- Press MODE/⇆ to switch " PErcEnt % ".
- Press TARE/↵ twice, then shows " 100 % ".
- Remove reference sample, then balance shows "0 % ".
- Put the tested sample on the weighing pan.
- Press ZERO/⇑ for long time to exit.

Notice：Notice：The minimum weight =10d（d：minimum scale）,. The sample could not be more than maximum weight.

Switching between percentage and weight reading

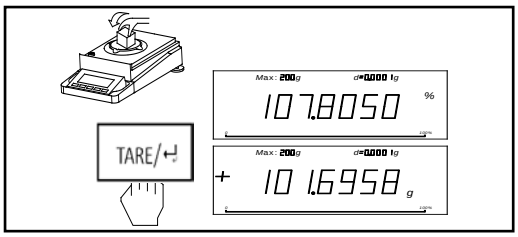

- Add sample on the container, shows percentage.
- Press TARE/↵, shows weight.
- Press TARE/↵ again，return to showing percentage.

4.5 System

This series balance can check temperature, data and time. Press MODE/⇆ untill shows "SYSTEm", then press key shortly to choose. Press TARE/↵ to switch after enter system.

4.6 Date Communication

Press CAL/ ⤓, could output the current reading of weight from RS232C port. There is another way to output reading date, shown at part seven.

5 CONFIGURING BALANCE

5.1 Operating the Configuring Keys

- Connet to the power. Keep pressing both the MODE/⇆ and ON/OFF on the shutdown of balance.

- Balance full – screen displays and displays self-inspection sign, then display C ×

  Page area line area word area

- Page area, line area and word area all display number from " zero " to a certain number automatic circulated

- The zero show in page, line or word area means that if now press TARE/↵ shortly, the balance will return to last menu.
- Nonzero digital in page or ine zrea, if press TARE/↵ shortly, enter to the next menu.

- Nonzero digital in word area, if press TARE/↵ shortly, select setting and showing "V" at same time.

- When balance displays C××× V , the "V" means the new setting is valid.

  Page area line area word area

- All functions are set on when produced. No need to set all the functions. You can set some of the functions to meet your special requirements.

5.2 Balance Function Setting List（* measn factory set）

	Page	Line	Word	Function	Optional	
C	1	1	1	Adapting the balance to ambient conditions	Very stable	
C	1	1	2		stable	*
C	1	1	3		Unstable	
C	1	1	4		Very unstable	
C	1	2	1	Ambient conditions Stability range	0.25 digit	
C	1	2	2		0.5 digit	
C	1	2	3		1 digit	*
C	1	2	4		2 digit	
C	1	2	5		4 digit	
C	1	2	6		8 digit	
C	1	2	7		16 digit	
C	1	2	8		32 digit	
C	1	2	9		64 digit	
C	1	3	1	Display	Display all decimal places	*
C	1	3	2		Not displaying the last decimal place	
C	1	3	3		Display the last decimal place stability	
C	1	3	4		Display all decimal places at stability	
C	1	4	1	Remove the container	Remove regardless of stability	
C	1	4	2		Remove at stability	*
C	1	5	1	Auto-zero function	Auto-zero on	*
C	1	5	2		Auto-zero off	
C	2	1	1	RS232C output	Print on request regardless of stability	
C	2	1	2		Print on request after stability	*
C	2	1	3		Auto print no stoppable regardless of stability	
C	2	1	4		Auto print not stoppable at stability	
C	2	2	1	Baud	1200	
C	2	2	2		2400	
C	2	2	3		4800	
C	2	2	4		9600	*
C	2	2	5		19200	
C	2	2	6		38400	
C	2	2	7		57600	
C	2	2	8		115200	
C	2	3	1	Data Bit	5	
C	2	3	2		6	
C	2	3	3		7	
C	2	3	4		8	*
C	2	4	1	Stop Bit	1	*
C	2	4	2		2	
C	2	5	1	Parity	无	*
C	2	5	2		Odd	
C	2	5	3		Even	
C	2	5	4		Retention for 1	
C	2	3	5		Retention for 0	
C	3	1	1		Version	
C	3	1	2		Linear correction	
C	3	1	3		Recovery factory set	

End

5.3 Balance Setting Funcation Explain

【***Adapting the balance to ambient conditions***】: Room to place the balance uses ordinary air-condition, generally select C113. If the air is large, should select C114.

【***Ambient conditions Stability rang***e】: If need to weighing quickly, can extend the display range. If the air is lager,should extend the range.

【***Display***】: Select your desired mode.

【***Remove the container***】: Please operate carefully if you select 141.

【***Auto zero***】: To do measurement ranging from a few to tens of digit around zero, please choose C152, and please pay attention to drifting of the zero digit, that might affect the precision of the measurement.

5.4 Balance Setting for Quick Weighing

【***Adapting the balance to ambient conditions***】: Select C111or C112, the speed is more fast.

5.5 Balance Setting for Strong Air Enviroment

Avoid strong air , select C114, C126, C127, C128, C129, C141 or C211.

5.6 Balance Setting for Linear Correction

Balance completely preheating, first to calibraion, then shutdown the balance. Restart the balance, thenenter the setting mode. Choose linear correction function (C312)

"LinE 0"flickering means that there is nothing on the weighing pan. Press TARE/↵ shortly. When send out voice of "du" and stop flickering, it is means finishing corretion. Then the balance auto turn to the next correcting point " LinE 50 " , it need to add 50g weight. Then press TARE/↵ shortly to ensure. After finishing all the correction point, the balance will display " LinE OFF ". Now the balance is still processing the data, please wait. Finishing data processing, the balance will shutdown automaticly.

5.7 Recover Factory Setting

If customer need to recovery the factory setting, please enter the balance setting mode when starting. Choose C313 to recover, then the balance will shutdown automaticly. Also it need to do linear correction.

6 TECHNICAL PARAMETERS, FUNCTION OPTIONSL, PARTS OPTIONAL, DIMENSION

6.1 Technical Parameters

Standard Configuration

- Power：100-240VAC、50/60Hz。
  Output：DC12V、600mA

Protection Class

- dustproof, waterproof
- Pollution precention level: 2
- Installation category: 11

Raw Material

- Bass：pack alloy, painting
- Cover：plastic (ABS/PC)
- Weighing pan：stainless steel

Environment Requirment:

- Environment Conditions：
- Environment Temperature：Ⅰ 20℃±2.5℃ fluctuations in temperature is not more than 1℃/h
  Ⅱ 20℃±7.5℃，fluctuations in temperature is not more than 5℃/h
- Relatice Humidity：Ⅰ 50%~75%； Ⅱ 40%~80%
- Working Voltage：Ⅰ 124DC； Ⅱ 12VDC
- There is no vibration, air and magnetic to effect measurement.
- The preheating is at least 45 minutes, 1 hours is more better.

Parameter List

FA series

	FA124	FA224	FA1004	FA1104	FA1604	FA2004	FA2104	FA2104S
Actual division value（g）	0.0001	0.0001	0.0001	0.0001	0.0001	0.0001	0.0001	0.0001/0.001
Weighing Capacity（g）	120	220	100	110	160	200	210	60/210
Repeatability（g）	0.0001	0.0001	0. 0001	0.0001	0.0001	0.0001	0.0001	0.0001/0.001
Maximum Permissible Error（MPE）	GB/T26497-2011							
Calibraion Weight（g）	100	200	100	100	100	200	200	200
Type	Standard							
Dimension（W/D/H）（mm）	365×223×338							
Packing Measurement（W/D/H）（mm）	500×310×450							
Pan Size（mm）	ϕ90							
Cover Effective Volume（mm）	150×165×200							
Net Weight（kg）	5.5							
Gross Weight（kg）	7.5							

FB series

	FB124	FB224	FB223	FB323	FB423
Actual division value（g）	0.0001	0.0001	0.001	0.001	0.001
Weighing Capacity（g）	120	220	220	320	420
Repeatability（g）	0.0001	0.0001	0.001	0.001	0.001
Maximum Permissible Error（MPE）	GB/T26497-2011				
Calibraion Weight（g）	100	200	200	200	200
Type	Standard				
Dimension（W/D/H）（mm）	365×223×338				
Packing Measurement（W/D/H）（mm）	500×310×450				
Pan Size（mm）	ϕ90				
Cover Effective Volume（mm）	150×165×200				
Net Weight（kg）	6				
Gross Weight（kg）	8				

JA series

	JA1003	JA1203	JA2003	JA3003	JA4103	JA5003
Actual division value（g）	0.001	0.001	0.001	0.001	0.001	0.001
Weighing Capacity（g）	100	120	200	300	410	500
Repeatability（g）	±0.001	±0.001	±0.001	±0.001	±0.001	±0.001
Maximum Permissible Error（MPE）	GB/T26497-2011					
Calibraion Weight（g）	100	100	200	200	200	500
Type	Standard					
Dimension（W/D/H）（mm）	365×223×338					
Packing Measurement（W/D/H）（mm）	500×310×450					
Pan Size（mm）	ϕ90					
Cover Effective Volume（mm）	150×165×200					
Net Weight（kg）	5.5					
Gross Weight（kg）	7.5					

6.2 RS232 Port

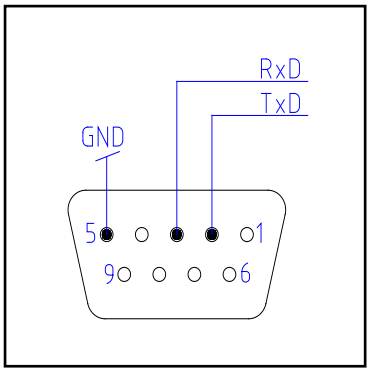

Each balance can be connected to equipment through RS232. (For example: RS232 series printer or Computer with 9 needles).

Connect to printer, parameter setting:

C2 2×、C2 3×、C2 4×、C2 5× then press TARE/ ⤓ shortly.

6.3 Figure Dimension

Balance

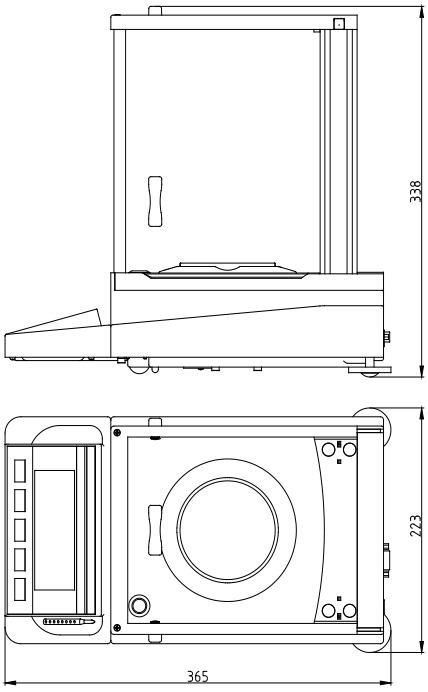

7 APPENDIX

7.1 RS232 Port Date Communication

Connect to microcomputer setting as follow:

Microcomputer: （9 needle hole）——Balance（9 needle hole）

2（RxD） —— 2（TxD）

3（TxD） —— 3（RxD）

5（GND） —— 5（GND）

- Port baud: 9600bps。
- Data format: 10 bit Start bit:（0） Data bit: 8（ASCII code，low in the former） Stop bit（1）
- No Parity
- The data is for continuous output, does not need special reading command.

One string output format:

1	2	3 4 5 6 7 8 9 10 11	12	13 14	15	16
±	Vacant code	Weighting area	Vacant code	Unit area	Return	Line feed

3~11 weighing area，same to the balance. The byte no showing is vacant code.

13~14 unit area，may be not same to the balance.

Balance display	Output	
	13	14
g	g（lowcase）	vacant code
oz	o（lowcase）	z（lowcase）
oz.g	o（lowcase）	g（lowcase）
ct	c（lowcase）	t（lowcase）
p	p（lowcase）	vacant code
pcs	p（lowcase）	s（lowcase）
%	%	vacant code

7.2 Failure Information and Solutions

Recovery Processing：Please contact your sales department or us if your balance works wrongly.

Some problems can be solved immediately.

1）If the self-test is not correctly performed, will display as follow:

EC ×	CPU broken, need to repair.
EC2	Keyboard error
EC3	Storage lost
EC4	A/D model is not started

2）Errors occurred during weighing

a. H Weight is too heavy, exceed the max weight:

- The sample is too heavy, please decrease the weight.
- The balance may be calibrated incorrectly (using calibration weight lighter than the standard), please re-calibrate your balance.

b. L Weight is too light：

- The weighing pan is not in place.
- Check below the weighing pan, see if it is touching any objects.

c. E1 Display over 9999999. Display capacity exceeded.

- If occurred at piece count, unload the balance (E1 dissapear), re-select the samples. 20,50,100 or more pieces of samples can be taken as 10 pieces of samples. Each time multiply the weight by the number (divide the number of the pieces you take by 10)

If occurred at weighing in percent, unload the balance (E1 dissapear), and reselect sample.

d. E4 When gross value <- 0, no tare

- Press “tare” key, tare. TARE/⇑
- Unplug the power adapter. Then plug in after 10 seconds.

e. E8 Error occurs when receiving data through RS232C

- Press ZERO/⇑ , if E8 disappears, please check data communication.
- Unplug the power adapter. Then plug in after 10 seconds.， recheck the set of data communication.

f. The weighting data do nor changeable with weighting changing.

- Recheck the data communication.

• The balance may be calibrated incorrectly (using calibration weight heavier than the standard), please re-calibrate your balance.

3）When balance display EC3, it means storage lost. Please press “MODE” & “TARE” to try to restore data.

4）After power connection, press ON/OFF, the balance display ———— for long time in self-checking. It indicates an unstable weighing location.

• The glass door is improperly shut down.

• Check below the weighing pan, see if it is touching any objects.

• Strong airflow, please reset the balance.

• There is more than 20% object on the weighing pan.

7.3 Maintenance and Cleaning

Maintenance

The regular maintenance will extend the life of balance.

Cleaning

Please use a soft and non-fluffy cloth to clean the figure and pa. If necessary, can use neuter cleaner.

Explain

It is recommended that clean the pan and workbench after weighing chemicals.